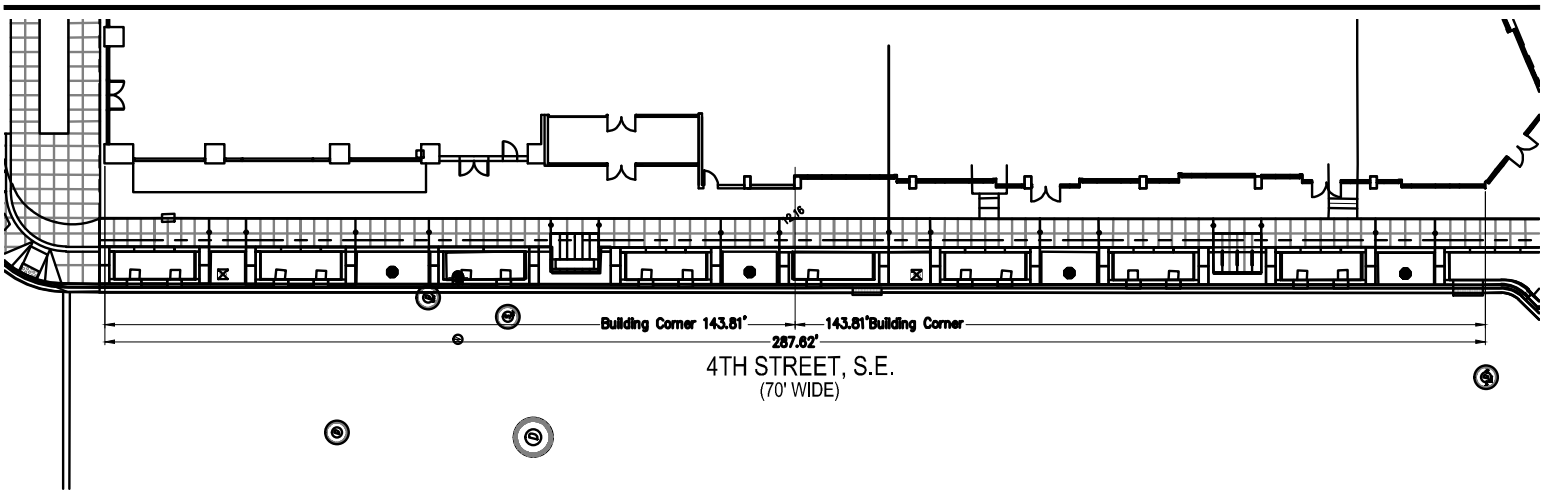

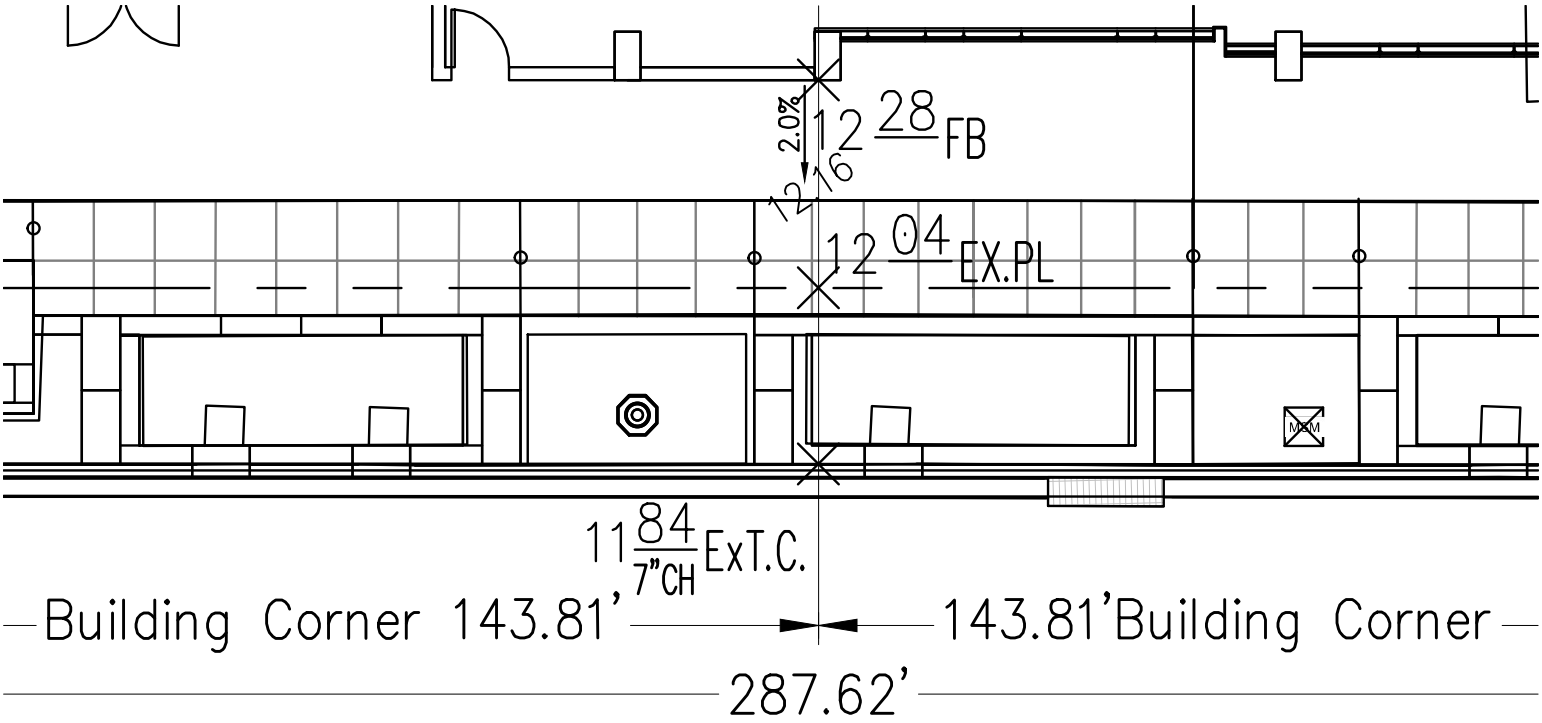

4TH STREET, S.E.
(70' WIDE)

PARCEL O – 4th STREET S.E.
Measure / Mip Point Elevation

WMC
WILES MENSCH CORPORATION
Planning, Engineering, Surveying & Landscape Architecture
11860 Sunrise Valley Drive Suite 200 Reston, Virginia 20191
(T) 703-391-7600 (F) 703-264-0959 www.wilesmensch.com

Sketch No. 1	
Date	Nov. 21, 14
Scale	Custom / Custom

P:\2014\056_Parcel-O\CAD\ENG\14-056 GRDG.dwg, 11/21/2014 11:14:37 AM, KLawson